SMT
SERVICES MACHINERY TRUCKS

INFO

VOLVO COMPACT GRAAFMACHINE ECR18E

WWW.SMT.NETWORK

Ready for work

The ultra-short swing radius ECR18E is the perfect choice for working in tight conditions. Easy to transport and easy to operate, this 1.8t excavator will make light work of tough jobs. With a robust design, combined with best-in-class service access, you can be sure this is a machine designed to promote low operating costs.

Small but tough

The unique high-profile counterweight design is made from three strong pieces of cast iron which wrap around the rear of the machine, protecting all vital components. All-around steel panels, recessed 10mm from the counterweight, offer further protection.

Best-in-class serviceability

Complete maintenance tasks with speed thanks to the hinged fuel tank which enables an impressive ease of access to the engine compartment, and easy to locate daily check points. A 50-hour greasing interval further contributes towards the best-in-class serviceability of this machine.

Safe and easy operation

The roomy and uncluttered operator environment of the machine is designed to keep you safe and focused while at work, including simple layout of the controls, fingertip controls and large travel pedals. Safety is built-in to the machine with a ROPS/TOPS/FOPS canopy, a large entrance including high visibility step, and an orange seatbelt as standard for easy checks by site managers.

Transport with ease

Transportation of the machine is safe and secure, thanks to its light weight and convenient design. With automatic slew lock and four easily accessed large tie-down points on the upper frame, the machine can be safely transported on a small trailer with up to three buckets and a hydraulic breaker, while maintaining a total transport weight of less than 2t.

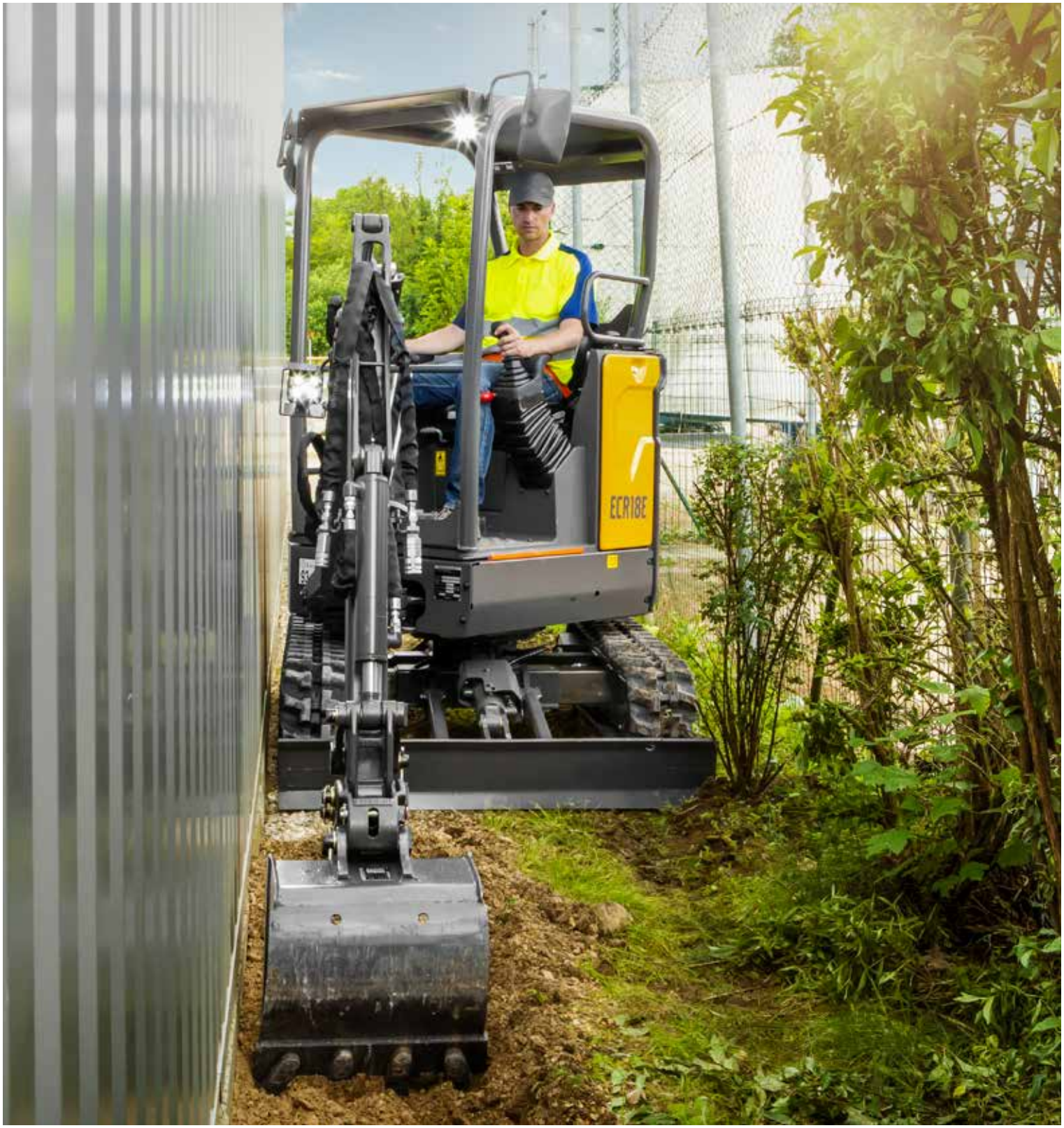

COMPACT BY DESIGN

For superior versatility when working in confined spaces, the ECR18E features an ultra-short tail radius. The machine design ensures that the frame corner, swing post and cylinder stay within the tracks when digging alongside obstacles. The result is maximum visibility and a reduced risk of machine damage when working in tight conditions.

Short swing, big potential

SAFETY FIRST

- High visibility entry step, orange seatbelt **A VOLVO EXCLUSIVE**
- Controls lock options (switch, seat operator presence or buckled seatbelt sensor) **A VOLVO EXCLUSIVE**
- 4 large easily accessible tie-down points on the upper frame **NEW**
- Outstanding all-around stability
- ROPS/TOPS/FOPS certified 4-pillar canopy

SMALL BUT TOUGH

- All-around steel panels **NEW**
- High-profile cast counterweight **A VOLVO EXCLUSIVE**
- Boom cylinder on top
- Protected hoses, routed inside the boom

OPERATE WITH EASE

- Fingertip controls **A VOLVO EXCLUSIVE**
- Simple controls layout
- Uncluttered floor, large travel pedals
- Automatic 2-speed travel
- Smooth combined movements

COMPACT BY DESIGN

- Ultra-short swing radius **NEW**
- Variable undercarriage width, less than 1-meter wide
- In-track boom swing

MAXIMIZE PROFITABILITY

- Best-in-class access to engine compartment thanks to hinged fuel tank **A VOLVO EXCLUSIVE**
- Auto engine shutdown and auto-idle (options) **A VOLVO EXCLUSIVE**
- 50-hour greasing intervals

THE COMPLETE PACKAGE

- Genuine Volvo Parts
- Full range of matched Volvo Attachments

Volvo ECR18E in detail

Engine		
Engine		D0.9A
Max. power at	r/min	2 300
Gross	kW	12
	hp	16.3
	According to ISO 2534 / SAE J1995	
Max. torque	Nm	52
at engine speed	r/min	1 800
No. of cylinders		3
Displacement	cm³	898
Bore	mm	72
Stroke	mm	73.6
Compression ratio		24
Electrical system		
Battery	V	1 x 12
Battery capacity	Ah	42 - 70
Alternator	V/Ah	12/40
Swing system		
Max, slew speed	r/min	9.5
Max, slew torque	daNm	243
Undercarriage		
Bottom/top rollers per side		3 / 0
Track tension		By grease piston
Blade (width x height)	mm	1 340 x 230
Digging Performances		
Standard bucket width (blade, W/O side cutter)	mm	450
Standard bucket mass	kg	33
Standard bucket rated capacity	l	36
Bucket rotation	°	196
Bucket breakout force (ISO)	daN	1 290
Short arm tearout force (ISO)	daN	795
Long arm tearout force (ISO)	daN	695

Weight and Ground Pressure		
Operating weight according to ISO 6016	kg	1 700
Ground pressure (canopy)	kPa	28.4
Transport weight	kg	1 625
With rubber tracks	mm	230
With short arm	mm	950
With fuel tank capacity	%	100
With long arm and heavy counterweight	+kg	42
With steel tracks	+kg	78
Hydraulic system		
Maximum system flow	l/min	34
Maximum flow for accessories	l/min	30
Maximum operating pressure	MPa	17
Travel System		
Max, drawbar pull	daN	1 300
Max. travel speed low	km/h	1.8
Max. travel speed high	km/h	3.5
Gradeability	°	30
Service Refill		
Fuel tank	l	21
Hydraulic system, total	l	21
Hydraulic tank	l	15
Sound Level		
Interior sound level according to ISO 6396		
LpA	dB(A)	78
External sound level according to ISO 6395 and EU Noise Directive (2000/14/EC) and 474-1:2006 +A1:200		
LwA	dB(A)	93

LIFTING CAPACITY ECR18E

These capacities are given for a machine equipped with a canopy, rubber tracks and without a bucket or quick coupler. The below values are in compliance with ISO standard 10567. They do not exceed 75% of the tipping load or 87% of the hydraulic limit with the machine on firm level ground. Loads marked with an asterisk (*) are limited by machine's hydraulic lifting capacity rather than tipping load. Caution: In accordance with EN 474-5, the machine must be equipped to carry out handling operations. It is the operator's obligation to know and follow the applicable national and local safety regulations.

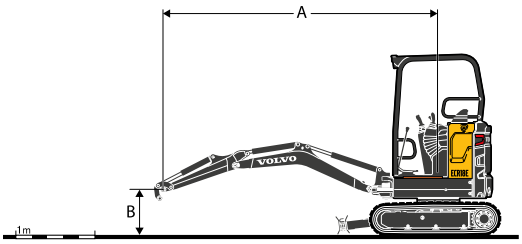

	Lifting point height (B) m		Lifting point radius (A) 2.0 m		3.0 m		Max reach		Max. m
Arm: 950mm + Dozer blade up	2	kg	-	-	-	259	-	251	3.06
	1	kg	484*	458	270*	254	265	209	3.44
	0	kg	469	434	269	248	220	210	3.40
	-1	kg	465*	440	262	-	221	243*	2.93
Arm: 950mm + Dozer blade down	2	kg	-	-	270*	259	274*	251	3.06
	1	kg	484*	458	300*	254	261*	209	3.44
	0	kg	593*	434	313*	248	248*	210	3.40
	-1	kg	465*	440	-	-	243*	243*	2.93
Arm: 950mm + Dozer blade down + Heavy counterweight	2	kg	-	-	270*	271*	274*	266	3.06
	1	kg	484*	484	300*	270	261*	222	3.44
	0	kg	593*	461	313*	264	248*	224	3.40
	-1	kg	465*	467*	-	-	243*	244*	2.93
Arm: 1 150mm + Dozer blade up + Heavy counterweight	2	kg	-	-	228*	228*	244*	239	3.29
	1	kg	390*	390*	280*	270	215	204	3.63
	0	kg	496	457	277	261	216	205	3.60
	-1	kg	497*	459	257*	257*	225*	225*	3.16
Arm: 1 150mm + Dozer blade down + Heavy counterweight	2	kg	-	-	228*	228*	244*	239	3.29
	1	kg	390*	390*	280*	270	239*	204	3.63
	0	kg	603*	457	314*	261	229*	205	3.60
	-1	kg	497*	459	257*	257*	225*	225*	3.16

DIMENSIONS

Description			Unit	ECR18E	
Arm			**mm**	**950**	**1 150**
A	Maximum cutting height		mm	3 442	3 582
B	Maximum dump height		mm	2 444	2 588
B*	Maximum bucket clearance		mm	2 482	2 625
C	Digging depth		mm	2 234	2 434
C*	Maximum digging depth		mm	2 528	2 727
D	Maximum vertical wall digging depth		mm	1 898	2 091
E	Maximum digging reach at ground level		mm	3 921	4 113
G	Highest position dozer blade	Short blade	mm	225	
		Long blade	mm	267	
H	Lowest position dozer blade	Short blade	mm	267	
		Long blade	mm	386	
J	Track length		mm	1 620	
K	Dozer blade, maximum reach at ground level	Short blade	mm	1 082	
		Long blade	mm	1 272	
L	Overall width with 230mm tracks	Min	mm	995	
		Max	mm	1 352	
M	Overall length		mm	3 431	3 309
M*	Transport length (arm lowered)	Short blade	mm	3 932	3 944
		Long blade	mm	4 122	4 134
P	Dozer blade height		mm	231	
Q	Shoe width (rubber)		mm	230	
Q(1)	Shoe width (steel)		mm	230	
R	Ground clearance to superstructure		mm	456	
S	Front slew radius		mm	1 575	1 568
T	Front slew radius with maximum offset		mm	1 269	1 287
U*	Overall height canopy		mm	2 298	
X	Tail slew radius		mm	688	
X*	Rear overhang (across tracks)		mm	12	
β1	Maximum boom offset to the right		mm	516	
β2	Maximum boom offset to the left		mm	640	

(1) Option

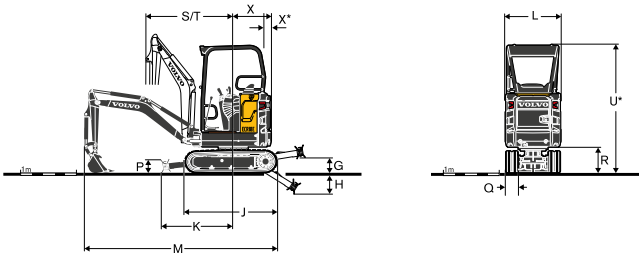

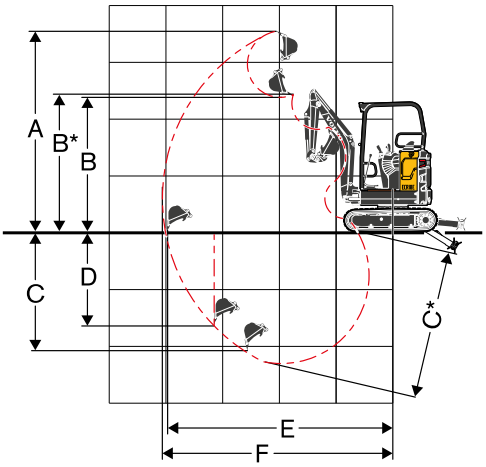

STANDARD EQUIPMENT

Engine
- Low emission, water-cooled, Volvo 3-cylinder diesel engine, meeting EPA Tier 4 and EU Stage V environmental regulations
- Starter motor protected against ignition when engine is already running
- Automatic engine cut-off in case of overheating or low oil level
- Engine starting safety device: the left console must be raised to operate the starter

Drivetrain
- Automatic two-speed travel hydraulic motors with reduction gears
- Inner flange bottom rollers lubricated for life

Electric / Electronic control system
- Maintenance-free battery
- IP67 protected electrical system and high quality connectors
- Battery disconnect connector
- Working light on the canopy frame
- 12V power socket in cab with cellular phone storage

Swing system
- Radial piston hydraulic motor with integrated shockless valve
- Automatic multi-disc spring applied hydraulic released slew brake

Superstructure
- Stamped steel panels all-around, recessed 10 to 15mm
- 4 integrated tie-down points on upper structure

Undercarriage
- Box welded fabricated frame
- Box section highly rigid dozer blade structure

Hydraulic system
- High performance Volvo Hydraulic System
- Flow-Sharing and Load Sensing main control valve
- Boom cylinder cushioning at end stroke (up)
- Patented filtering and filling element
- Large side by side oil cooler and radiator
- Double-acting hydraulic circuit for accessories
- Hydraulic hoses routed inside the boom for increased protection

Canopy
- Robust 4-pillar structure canopy
- Cushionned operator station
- Highly visible orange footstep
- Highly visible orange seatbelt with warning indicator on display
- Toolbox with integrated storage for operator's manual and lockable door

Digging equipment
- Casted end and structural parts on arm, pivot, undercarriage and upper structure noze
- Monoblock box welded fabricated boom and arm
- Long-life steel bushings & hardened, pre-lubricated and corrosion resistant pins
- 50-hours intervals on all grease points

Machine controls
- Automatic locking device for pilot controls and travel levers when the left console is raised
- Proportional and adjustable fingertip control for boom offset and auxiliary circuit
- Pressure accumulator to lower the equipment on the ground

Instrumentation and monitoring
- Permanent digital hour meter visible from outside cab
- Engine temperature and fuel level gauges

Official approval
- Machine conforming to European directive 2006/42/EC
- Noise emissions in the environment conforming to directive 2000/14/EC
- Hand Arm Vibrations - Whole Body Vibrations compliant with directive 2002/44/EC
- Electromagnetic compatibility (EMC) conforming to European directive 2004/108/EC and its amendments
- Object handling device conforming to EN 474-1 and EN 474-5 standards
- ROPS (Roll-Over Protective Structure) conforming to ISO 3471-1 and SAE J1040 standards
- TOPS (Tip-Over Protective Structure) conforming to ISO 12117 and EN 13531 standards
- OPG 1 (Operator Protective Guard on top) conforming to ISO 10262 standard (when equipped)

OPTIONAL EQUIPMENT

Engine
- Auto idling system
- Engine auto shut-down with time adjustment

Operator environment
- Vinyl seat with mechanical suspension, low back and 2" orange seatbelt
- Vinyl seat with mechanical suspension, extended back with lumbar adjustment and 2" orange retractable seatbelt
- Vinyl seat with mechanical suspension, extended back with lumbar adjustment and 3" retractable seatbelt
- Additional lockable storage box (behind the seat)
- Electrical switch for ISO/SAE control pattern change
- Travel alarm
- Anti-theft, code lock
- Anti-theft, coded key
- Controls lock, switch
- Controls lock, seat operator presence and switch
- Controls lock, seatbelt sensor
- Rear wind protection canopy
- Tool kit

Machine exterior
- Left/Right rearview mirror
- One protected worklight on the boom
- One rear worklight
- Rotating beacon
- One protected worklight on the boom LED
- One rear worklight LED
- LED worklights package
- Warning beacon, flashing LED
- Green beacon link to safety belt
- Heavy counterweight
- Several level of customisation (RAL specifications) to match with your corporate identity

Undercarriage
- 230mm rubber tracks
- 230mm steel tracks
- Short dozer blade
- Long dozer blade

Hydraulics
- Relief valve for auxiliaries
- Kit 2 flat face hydraulic couplings
- Double acting circuit for hydraulic quick couplers
- Boom and arm safety lifting valves
- Boom, arm and dozer blade safety lifting valves
- Several grades of mineral and bio hydraulic oil

Digging equipment
- Short arm
- Long arm with heavy counterweight

Machine controls
- On/Off fingertip control for boom offset and auxiliary circuit

Attachments
- Volvo mechanical quick coupler (pin-on)
- Lehnhoff® mechanical quick coupler
- Symmetrical type mechanical quick coupler (S30)
- General Purpose buckets
- Fixed Ditching buckets
- Tiltable Ditching buckets
- Hydraulic breaker HB02LN

Not all products are available in all markets. Under our policy of continuous improvement, we reserve the right to change specifications and design without prior notice. The illustrations do not necessarily show the standard version of the machine.

EEN KRACHTIGE MACHINE INCLUSIEF DE STERKE SERVICE VAN SMT

OVER SMT

SMT is een toonaangevend full service distributiebedrijf, gespecialiseerd in construction, material handling en recycling equipment in Nederland. met professioneel advies en maximale technische ondersteuning.

SMT LEVERT SERVICE BOVEN VERWACHTING

Bij SMT stellen we onze klanten altijd centraal en realiseren we meerwaarde voor onze klanten met een hoogwaardige service die bij het niveau van onze merken past. Service is de kern van onze propositie: voor iedere vraag van onze klanten bestaat een slimme oplossing. Daarom levert SMT een service die verder gaat en uw verwachtingen altijd overtreft. Vanzelfsprekend vinden wij dat.

ONZE VESTIGINGEN:

SMT Netherlands B.V.
Dukaat 1
8305 BC Emmeloord
Tel: +31 (0)527 635 500

Grutter 1
5253 RM Nieuwkuijk
Tel: +31 (0)527 635 500

info.nl@smt.network
www.smt.network